REV #	REV DATE	DESCRIPTION

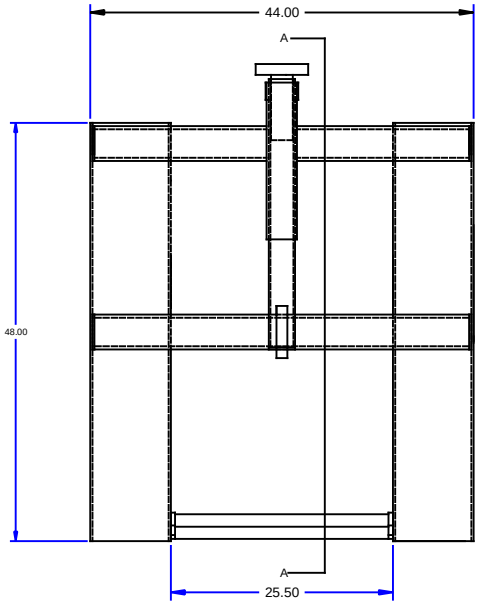

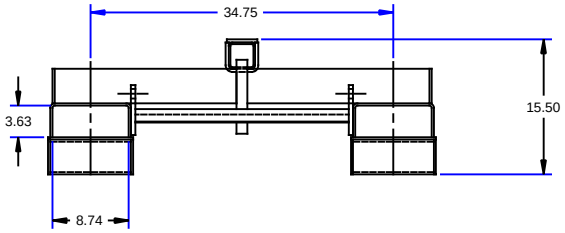

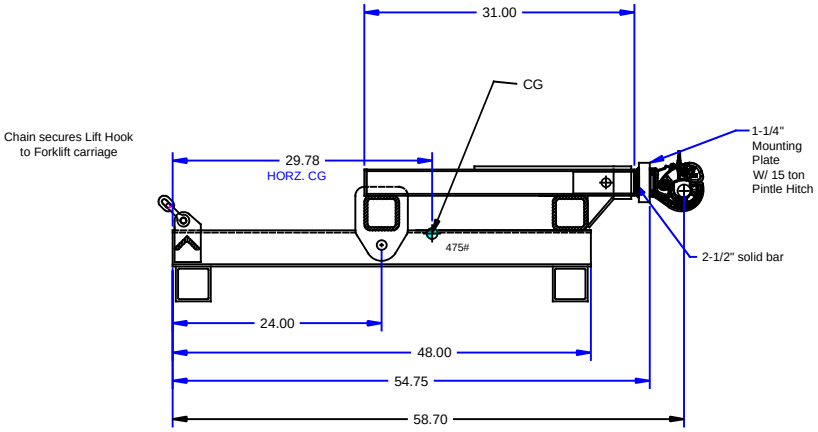

Section A-A

Star Industries
MODEL 1396C NAVY LIFT-N-TOW WITH FORK POCKETS FOR 48" LONG FORKS
12K Swivel Hook at 24" LOAD CENTER
Jib w/ 30K MGTW and 6K MVL PINTLE HITCH
DWG BY APDI 6/13/2011 DWG 1396C-01
Sht 1 of 3